VGRADNA WINDBOX DX-DA| Zra?ne zavese s toplotno ?rpalko Daikin

Karakteristike



- Energetsko var?na zra?na zavesa s toplotno ?rpalko: Do 70% zmanjšanje stroškov in emisij CO2 (na?in ogrevanja).
- Samonosilna konstrukcija ohišja iz pocinkane jeklene plošč?e, izdelano v strukturni epoksi-poliestrski barvi standardno bele barve RAL9016.Druge barve ali nerjave?e jeklo so na voljo po zahtevi.
- Mikro-perforirana dovodna rešetka s filtrirnimi funkcijami z enostavnim servisiranjem.Notranji predfilter je vklju?en.
- Anodizirani aluminijasti odhondi ventili oblikovani z zra?nim profilom, nastavljivi od 0 do 15 ° na vsaki strani.
- Centrifugalni ventilatorji z dvojnim dovodom, ki jih poganja zunanji rotor motorja z nizko raven hrupa. Izbira med 5 hitrostmi.Modeli EC so sestavljeni z ventilatorji z visoko u?inkovitostjo in majhno porabo.
- Notranji predfilter je vklju?en.
- Advanced Plug&Play control. Includes: Advanced PRO control with integrated LCD screen, door contact, 7m RJ11 cable and remote control. With integrated functions: door delay (configurable); operation, alarm and maintenance warning signals; and multiple digital inputs that modify the curtain's operation.
- Includes protective varnish for the electronic board and control.
- DX 1:1:
  Pripravljeno za priklju?itev na zunanjo toplotno ?rpalko DAIKIN Inverter (R32) in ekspanzijski ventil ni vklju?en, naro?nik ga mora kupiti sam. Zahteva DAIKIN DX Interface KIT, prilagojen za zra?no zaveso in programabilno krmiljenje.
- DX VRV:
  Pripravljeno za priklju?itev na zunanjo toplotno ?rpalko DAIKIN VRV (R410A) in ekspanzijski ventil ni vklju?en, naro?nik ga mora kupiti sam. Zahteva DAIKIN VRV Interface KIT, prilagojen za zra?no zaveso in programabilno krmiljenje.

Specifikacije

50Hz

Toplotna ?rpalka - DX 1:1

Model	(m³/h)	(m)
RECM 1500 DX12-DA	5/8" - 3/8"	
RECM 2000 DX16-DA	5/8" - 3/8"	
RECM 2500 DX21-DA	3/4" - 3/8"	
RECM 2500 DX24-DA	3/4" - 3/8"	
RECG 1000 DX10-DA	5/8" - 3/8"	
RECG 1500 DX15-DA	5/8" - 3/8"	
RECG 1500 DX13-DA	5/8" - 3/8"	
RECG 2000 DX22-DA	3/4" - 3/8"	
RECG 2500 DX25-DA	3/4" - 3/8"	
RECG 2500 DX29-DA	7/8" - 1/2"	

Toplotna ?rpalka - VRV

Model	(m³/h)	(m)
RECM 1000 VRV8-DA	5/8" - 3/8"	
RECM 1500 VRV12-DA	5/8" - 3/8"	
RECM 2000 VRV16-DA	5/8" - 3/8"	
RECM 2000 VRV19-DA	3/4" - 3/8"	
RECM 2500 VRV21-DA	3/4" - 3/8"	
RECM 2500 VRV24-DA	3/4" - 3/8"	
RECG 1000 VRV10-DA	5/8" - 3/8"	
RECG 1500 VRV13-DA	5/8" - 3/8"	
RECG 1500 VRV15-DA	5/8" - 3/8"	

Toplotna ?rpalka - VRV		
Model	(m³/h)	(m)
RECG 2000 VRV20-DA	3/4" - 3/8"	
RECG 2000 VRV24-DA	3/4" - 3/8"	
RECG 2500 VRV25-DA	3/4" - 3/8"	
RECG 2500 VRV29-DA	7/8" - 3/8"	

60Hz

Toplotna ?rpalka - DX 1:1		
Model	(m³/h)	(m)
RECM 1500 DX12-DA	5/8" - 3/8"	
RECM 2000 DX16-DA	5/8" - 3/8"	
RECM 2500 DX21-DA	3/4" - 3/8"	
RECM 2500 DX24-DA	3/4" - 3/8"	
RECG 1000 DX10-DA	5/8" - 3/8"	
RECG 1500 DX15-DA	5/8" - 3/8"	
RECG 1500 DX13-DA	5/8" - 3/8"	
RECG 2000 DX22-DA	3/4" - 3/8"	
RECG 2500 DX25-DA	3/4" - 3/8"	
RECG 2500 DX29-DA	7/8" - 1/2"	

Toplotna ?rpalka - VRV		
Model	(m³/h)	(m)
RECM 1000 VRV8-DA	5/8" - 3/8"	
RECM 1500 VRV12-DA	5/8" - 3/8"	
RECM 2000 VRV16-DA	5/8" - 3/8"	
RECM 2000 VRV19-DA	3/4" - 3/8"	
RECM 2500 VRV21-DA	3/4" - 3/8"	
RECM 2500 VRV24-DA	3/4" - 3/8"	
RECG 1000 VRV10-DA	5/8" - 3/8"	
RECG 1500 VRV13-DA	5/8" - 3/8"	
RECG 1500 VRV15-DA	5/8" - 3/8"	
RECG 2000 VRV20-DA	3/4" - 3/8"	
RECG 2000 VRV24-DA	3/4" - 3/8"	
RECG 2500 VRV25-DA	3/4" - 3/8"	
RECG 2500 VRV29-DA	7/8" - 3/8"	

Dimenzije

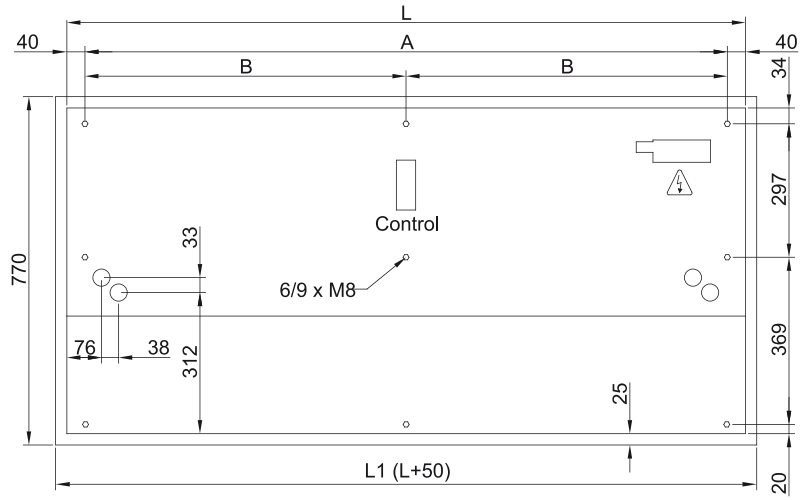

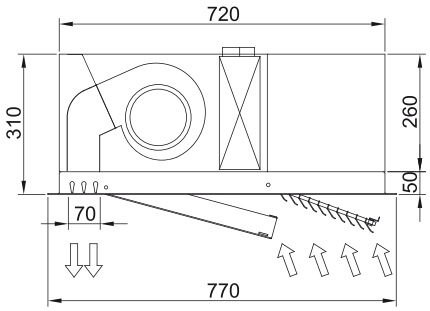

	L	L1	A	B
Recessed Windbox 1000	1000	1050	920	-
Recessed Windbox 1500	1500	1550	1420	710
Recessed Windbox 2000	2000	1550	1920	960
Recessed Windbox 2500	2500	2550	2420	1210