# DAM DX-DA| Zra?ne zavese s toplotno ?rpalko Daikin

## Karakteristike




- Energetsko var?na zra?na zavesa s toplotno ?rpalko: Do 70% zmanjšanje stroškov in emisij CO2 (na?in ogrevanja).
- Samonosilna konstrukcija ohišja iz pocinkane jeklene plošč?e, izdelano v strukturni epoksi-poliestrski barvi standardno bele barve RAL9016.Druge barve ali nerjave?e jeklo so na voljo po zahtevi.
- Mikro-perforirana dovodna rešetka s filtrirnimi funkcijami z enostavnim servisiranjem.Notranji predfilter je vklju?en.
- Anodizirani aluminijasti odhondi ventili oblikovani z zra?nim profilom, nastavljivi od 0 do 15 ° na vsaki strani.
- Centrifugalni ventilatorji z dvojnim dovodom, ki jih poganja zunanji rotor motorja z nizko raven hrupa. Izbira med 5 hitrostmi.Modeli EC so sestavljeni z ventilatorji z visoko u?inkovitostjo in majhno porabo.
- Notranji predfilter je vklju?en.
- Advanced Plug&Play control. Includes: Advanced PRO control with integrated LCD screen, door contact, 7m RJ11 cable and remote control. With integrated functions: door delay (configurable); operation, alarm and maintenance warning signals; and multiple digital inputs that modify the curtain's operation.
- Includes protective varnish for the electronic board and control.
- DX 1:1:
  Pripravljeno za priklju?itev na zunanjo toplotno ?rpalko DAIKIN Inverter (R32) in ekspanzijski ventil ni vklju?en, naro?nik ga mora kupiti sam. Zahteva DAIKIN DX Interface KIT, prilagojen za zra?no zaveso in programabilno krmiljenje.
- DX VRV:
  Pripravljeno za priklju?itev na zunanjo toplotno ?rpalko DAIKIN VRV (R410A) in ekspanzijski ventil ni vklju?en, naro?nik ga mora kupiti sam. Zahteva DAIKIN VRV Interface KIT, prilagojen za zra?no zaveso in programabilno krmiljenje.

## Specifikacije

50Hz

**Toplotna ?rpalka - DX 1:1**

| Model | (m³/h) | (m) |
|---|---|---|
| DAM ECM 1500 DX12-DA | 5/8" - 3/8" | |
| DAM ECM 2000 DX16-DA | 5/8" - 3/8" | |
| DAM ECM 2500 DX21-DA | 3/4" - 3/8" | |
| DAM ECM 2500 DX24-DA | 3/4" - 3/8" | |
| DAM ECM 3000 DX26-DA | 3/4" - 3/8" | |
| DAM ECG 1000 DX10-DA | 5/8" - 3/8" | |
| DAM ECG 1500 DX13-DA | 5/8" - 3/8" | |
| DAM ECG 1500 DX15-DA | 5/8" - 3/8" | |
| DAM ECG 2000 DX22-DA | 3/4" - 3/8" | |
| DAM ECG 2500 DX25-DA | 3/4" - 3/8" | |
| DAM ECG 2500 DX29-DA | 7/8" - 1/2" | |
| DAM ECG 3000 DX34-DA | 7/8" - 1/2" | |

**Toplotna ?rpalka - VRV**

| Model | (m³/h) | (m) |
|---|---|---|
| DAM ECM 1000 VRV8-DA | 5/8" - 3/8" | |
| DAM ECM 1500 VRV12-DA | 5/8" - 3/8" | |
| DAM ECM 2000 VRV16-DA | 5/8" - 3/8" | |
| DAM ECM 2000 VRV19-DA | 3/4" - 3/8" | |
| DAM ECM 2500 VRV21-DA | 3/4" - 3/8" | |
| DAM ECM 2500 VRV24-DA | 3/4" - 3/8" | |
| DAM ECM 3000 VRV26-DA | 3/4" - 3/8" | |

| Toplotna ?rpalka - VRV | | | |
|---|---|---|---|
| **Model** | (m³/h) | | (m) |
| DAM ECM 3000 VRV30-DA | 7/8" - 3/8" | | |
| DAM ECG 1000 VRV10-DA | 5/8" - 3/8" | | |
| DAM ECG 1500 VRV13-DA | 5/8" - 3/8" | | |
| DAM ECG 1500 VRV15-DA | 5/8" - 3/8" | | |
| DAM ECG 2000 VRV20-DA | 3/4" - 3/8" | | |
| DAM ECG 2000 VRV24-DA | 3/4" - 3/8" | | |
| DAM ECG 2500 VRV25-DA | 3/4" - 3/8" | | |
| DAM ECG 2500 VRV29-DA | 7/8" - 3/8" | | |
| DAM ECG 3000 VRV29-DA | 7/8" - 3/8" | | |
| DAM ECG 3000 VRV34-DA | 7/8" - 3/8" | | |

60Hz

| Toplotna ?rpalka - DX 1:1 | | |
|---|---|---|
| **Model** | (m³/h) | (m) |
| DAM ECM 1500 DX12-DA | 5/8" - 3/8" | |
| DAM ECM 2000 DX16-DA | 5/8" - 3/8" | |
| DAM ECM 2500 DX21-DA | 3/4" - 3/8" | |
| DAM ECM 2500 DX24-DA | 3/4" - 3/8" | |
| DAM ECM 3000 DX26-DA | 3/4" - 3/8" | |
| DAM ECG 1000 DX10-DA | 5/8" - 3/8" | |
| DAM ECG 1500 DX13-DA | 5/8" - 3/8" | |
| DAM ECG 1500 DX15-DA | 5/8" - 3/8" | |
| DAM ECG 2000 DX22-DA | 3/4" - 3/8" | |
| DAM ECG 2500 DX25-DA | 3/4" - 3/8" | |
| DAM ECG 2500 DX29-DA | 7/8" - 1/2" | |
| DAM ECG 3000 DX34-DA | 7/8" - 1/2" | |

| Toplotna ?rpalka - VRV | | | |
|---|---|---|---|
| **Model** | (m³/h) | | (m) |
| DAM ECM 1000 VRV8-DA | 5/8" - 3/8" | | |
| DAM ECM 1500 VRV12-DA | 5/8" - 3/8" | | |
| DAM ECM 2000 VRV16-DA | 5/8" - 3/8" | | |
| DAM ECM 2000 VRV19-DA | 3/4" - 3/8" | | |
| DAM ECM 2500 VRV21-DA | 3/4" - 3/8" | | |
| DAM ECM 2500 VRV24-DA | 3/4" - 3/8" | | |
| DAM ECM 3000 VRV26-DA | 3/4" - 3/8" | | |
| DAM ECM 3000 VRV30-DA | 7/8" - 3/8" | | |
| DAM ECG 1000 VRV10-DA | 5/8" - 3/8" | | |
| DAM ECG 1500 VRV13-DA | 5/8" - 3/8" | | |
| DAM ECG 1500 VRV15-DA | 5/8" - 3/8" | | |
| DAM ECG 2000 VRV20-DA | 3/4" - 3/8" | | |
| DAM ECG 2000 VRV24-DA | 3/4" - 3/8" | | |
| DAM ECG 2500 VRV25-DA | 3/4" - 3/8" | | |
| DAM ECG 2500 VRV29-DA | 7/8" - 3/8" | | |
| DAM ECG 3000 VRV29-DA | 7/8" - 3/8" | | |
| DAM ECG 3000 VRV34-DA | 7/8" - 3/8" | | |

## Dimenzije

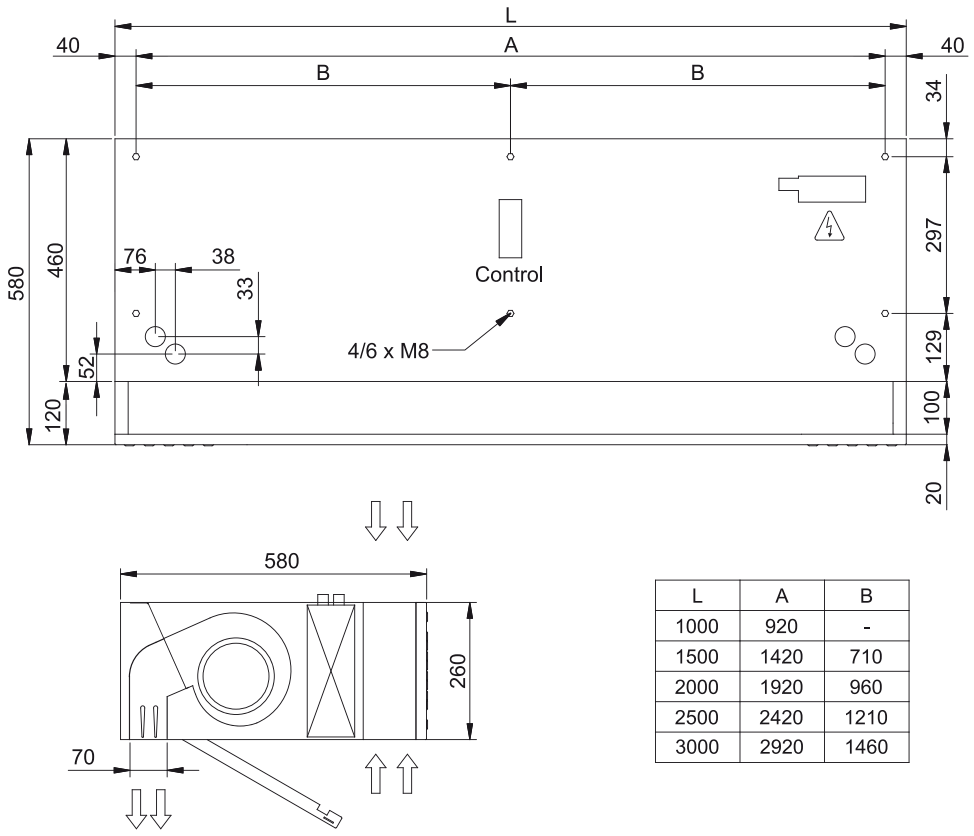


| L | A | B |
|---|---|---|
| 1000 | 920 | - |
| 1500 | 1420 | 710 |
| 2000 | 1920 | 960 |
| 2500 | 2420 | 1210 |
| 3000 | 2920 | 1460 |